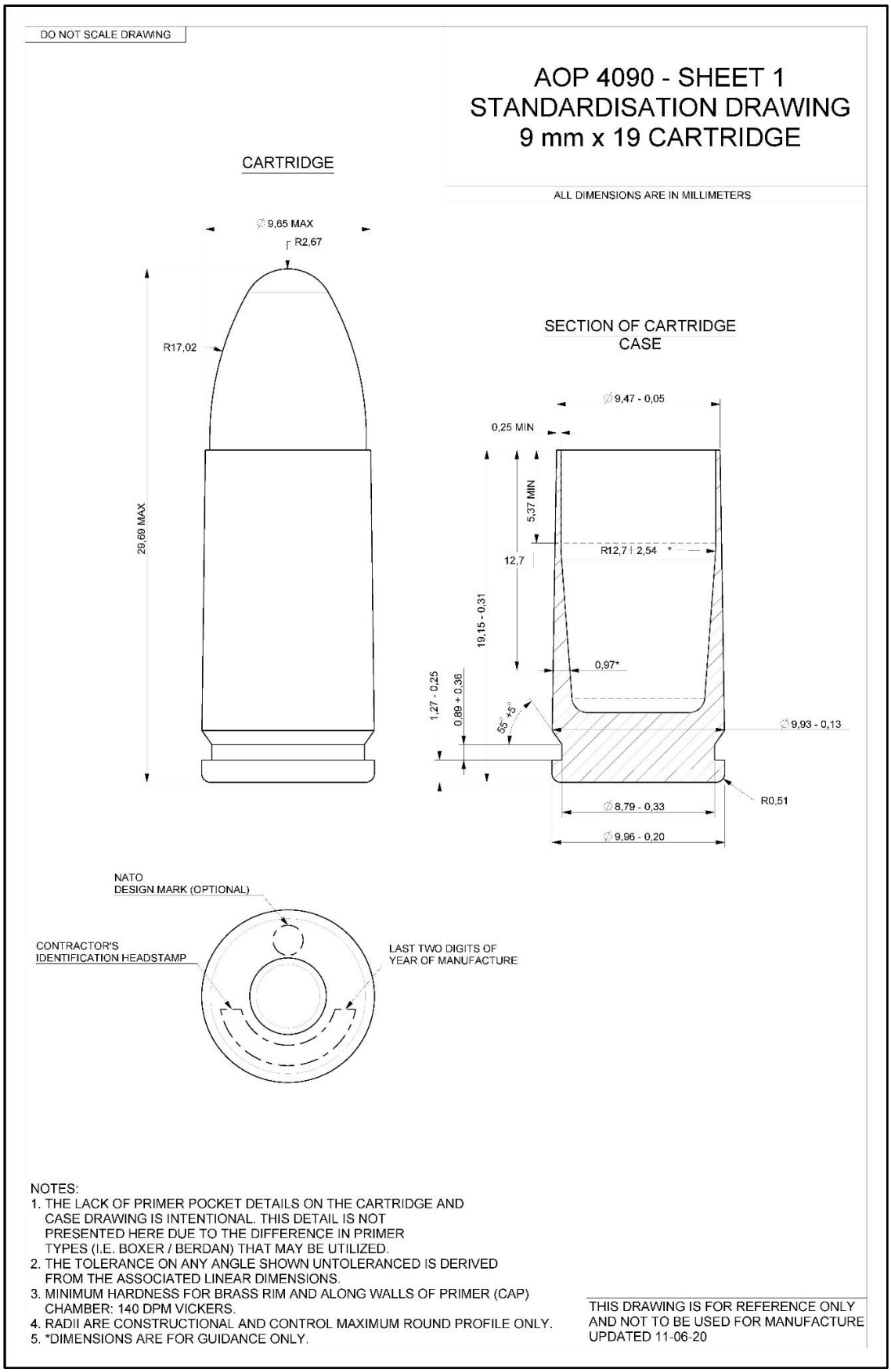A.1. SHEET 1 – 9 mm x 19 CARTRIDGE